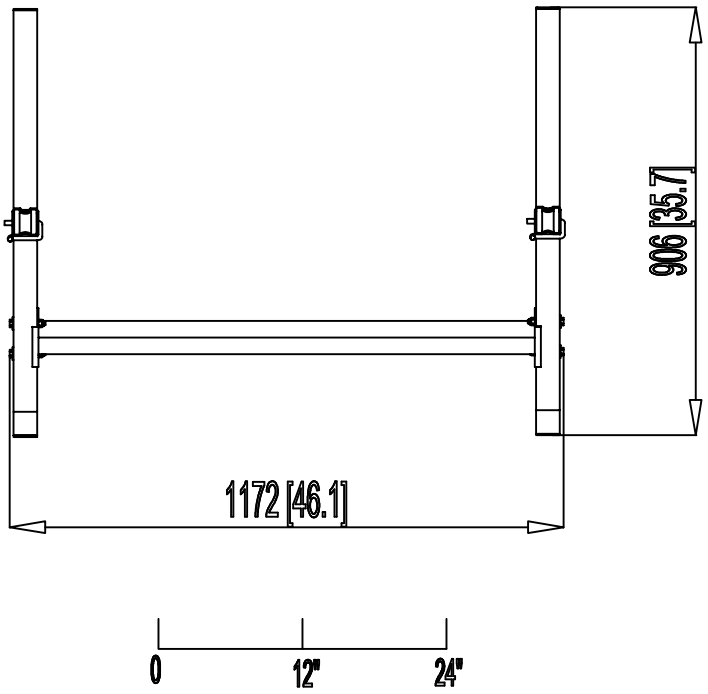

PSS60X